Dumper Log : Dump Truck Efficiency Monitoring System

For The Mining and Construction Industry

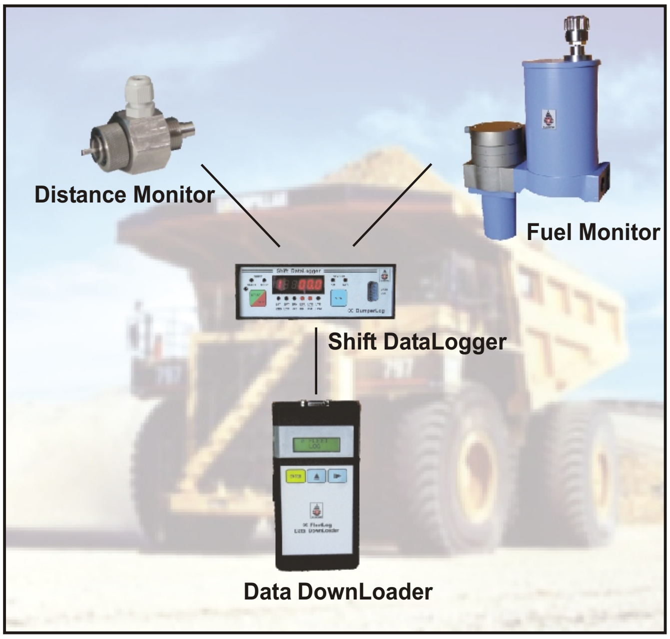

Specifications

Power Supply	24V Vehicle Battery
Measured Parameters	*Net Fuel Consumption (Litres) *Distance Travelled (Kms) *Engine Hours clocked (Hrs)
Accuracy of fuel Measured	± 0.5% of reading
Accuracy of Kms measured	± 0.001 KM
Accyuracy of Engine Hrs.	± 10 Seconds
Display	6 Digit, 7 Segment Red LED
Parameter Displayed	*Fuel Consumed *Kms travelled *Engine Run Hrs *Fuel Flow Rate *Real Time, Dat and Date
Data Storage	Max. 90 Shift (30 days)before down loading
Program idling Interval	0 - 99 minutes
	Dumper Raport Occupy Disc Space : 30 KB
Software Utility	OS required : Windows 98 & above

Introduction

Fluidynes DumperLog Dumptuck Efficiency Monitoring System is a unique concept of Dumptruck Efficiency measurement in the harsh enviornment of open cast and continuous mines and construction sites. Apart from accurate measurement and logging of a fuel consumption, Kms covered and Engine Run Time it provides innovative features to conserve diesel fuel and reduce engine wear. The system generates detailed computerised reports on shiftwise analysis of vehicle operations.

Features

Suitable for all makes of engines for 25T/40T/85T/120T dumpers.
Unique return fuel deareation for Cummins PT fuel system.
Measures and logs net fuel consumption, Kms travelled and engine run hrs.
Provides auto engine cut off to minimise extended engine idling.
Computes mileage (Lit. / Km) and an average consumption (Lit. / Hrs.).
Software utility for generation of shift analysis report.
Tamper proof construction for controlling fuel pilferage.

Shift Analysis Report

Overall Efficiency

Date : 18/08/03
User : Fluidyne
Vehicle ID : 85 - 054

Shift Start Date : 18/08/03   Shift Stop Date : 18/08/03
Shift Start Time : 07:00   Shift Stop Time : 15:00

Overall Shift Data

Date	Shift	KM	Litre	Hrs.	KM/Lit	Lit/Hr
18/08/03	I	60	325	4.6	5.4	70.6
18/08/03	II	64	355	4.9	5.5	72.4
18/08/03	III	42	239	3.2	5.7	74.6
	Total	166	919	12.7	Avg. 5.3	Avg. 72.5

Installation

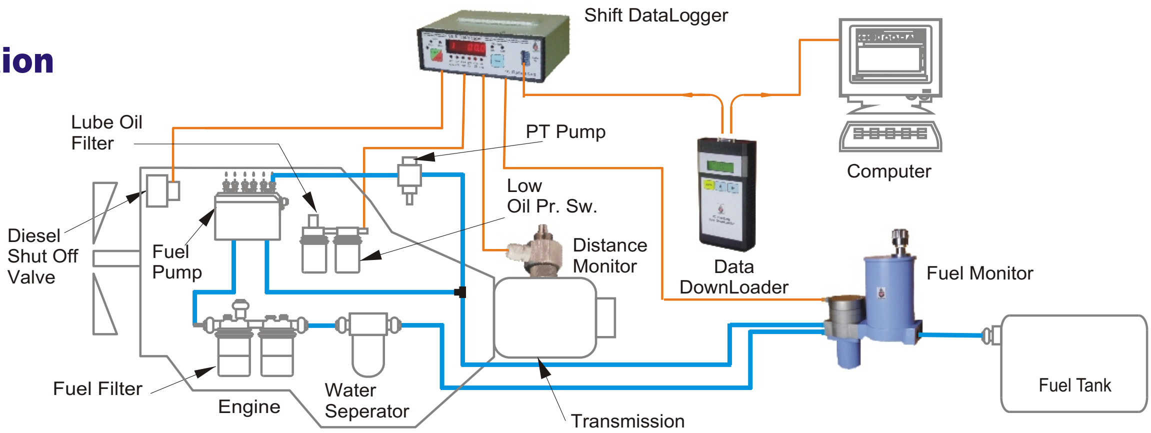

Fluidyne Control Systems (P) Ltd.

S. No. 81/4B,Near Agarwal Godown,
Shivne, Pune-411 023. India
Phone: 020-25290504, 25290870 Fax: 020-25292773
E-mail: fluidyne@vsnl.net